G3-M7-Lesson 2

Kathy is 167 centimeters tall. The total height of Kathy and her younger sister Jenny is 319 centimeters. How much taller is Kathy than Jenny? Draw at least 2 different ways to represent the problem.

I can use the RDW process to help me solve. First, I need to read (and reread) the problem. This will help me visualize the problem. Then, I can draw a model to represent the problem with the known and unknown information.

Step 1:

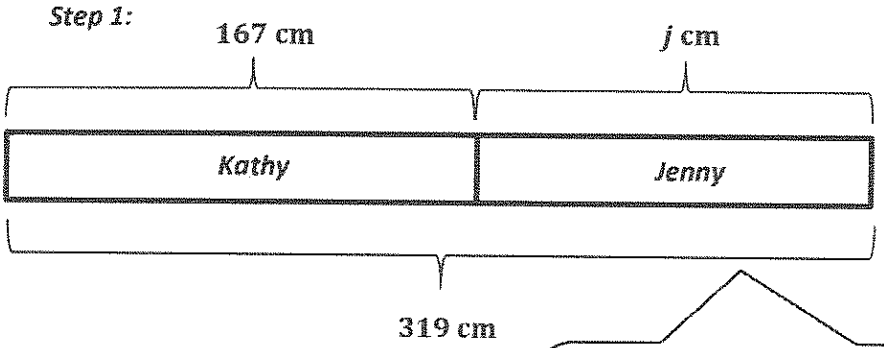

j represents Jenny's height in centimeters

$319 \text{ cm} - 167 \text{ cm} = j$

$j = 152 \text{ cm}$

I notice that this is a two-step problem. From my drawing, I know the total height of the two sisters and the height of Kathy. The unknown in my drawing is Jenny's height, which is labeled with the letter j. I can write a subtraction equation to find her height. But this doesn't answer the question.

Step 2:

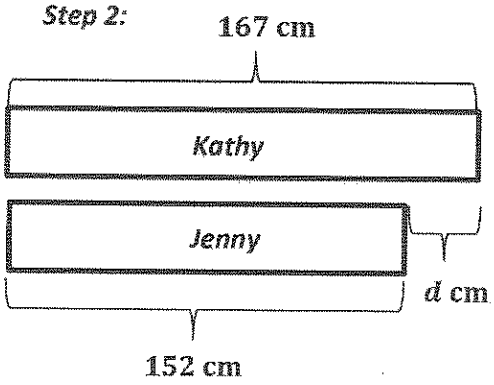

d represents the difference between the two heights in centimeters

$167 \text{ cm} - 152 \text{ cm} = d$

$d = 15 \text{ cm}$

The question is, "How much taller is Kathy than Jenny?" That means I need to draw a second diagram and write a subtraction equation to answer the question. I can label the unknown, which this time is the difference of their heights, with a new letter.

Finally, I can check my work when I write my statement.

Kathy is 15 centimeters taller than Jenny.

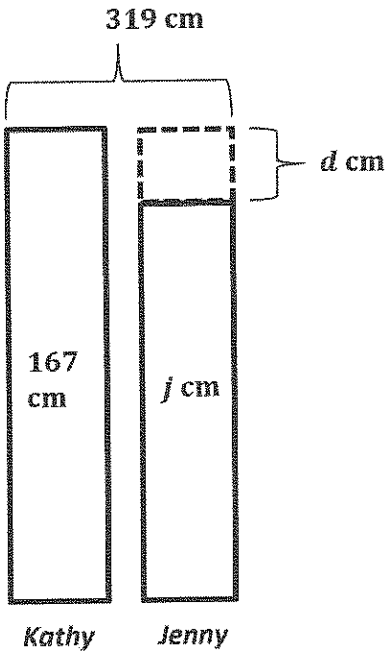

This is another way to represent the problem. I can draw my tape diagram vertically because the problem is about height. I can also put both unknowns in one diagram instead of drawing each step separately. This might save me time. The next step will be to write equations and a statement that go with my drawing.

Step 1:

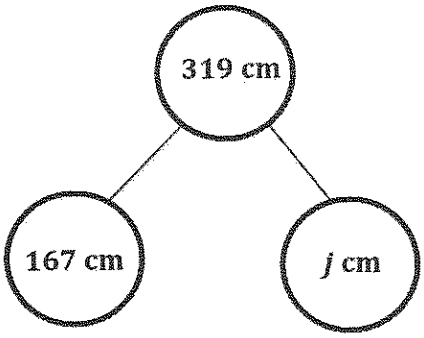

Step 2:

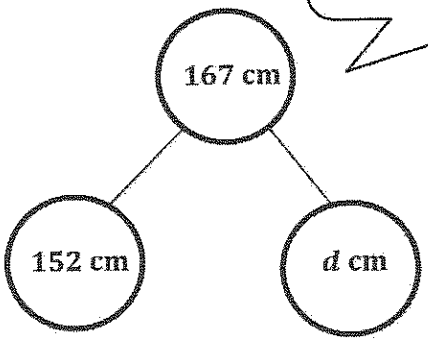

I could also model the problem using number bonds because they show the part–part–whole relationship.

There are many different ways to label and model the same problem, but I always want to draw a model that represents the problem most clearly to me. My drawing is important because it helps me decide on a way to solve, and it also helps me write my number sentences and a written statement to answer the question.